Barometer Sensor

1. Description

BMP180 is a high precision, small volume and ultra-low power consumed pressure sensor used on mobile devices. It owns perfect performance with the lowest absolute accuracy of 0.03hPa. The power consumption is pretty low, only 3μA. BMP180 uses powerful 8-pin leadless ceramic chip carriers (LCCC) ultrathin package and connects various micro-processors directly via I2C circuit. Because its input voltage is 1.8V-3.3V, while generally the motherboard provides a voltage of 5V, we made a 5V-3.3V regulator circuit and 5V-3.3V level shifting circuit for the convenience of users.

2. Features

- Digital two wire (I2C) interface
- Wide barometric pressure range
- Flexible supply voltage range
- Ultra-low power consumption
- Low noise measurement
- Factory-calibrated
- -40 to +85°C operational range,±2°C temperature accuracy
- Size 31.28mm×23.48mm

3. Applications

- Enhancement of GPS navigation
- Indoor and outdoor navigation
- Leisure and sports
- Weather forecast
- Vertical velocity indication

4. Electrical Characteristics

PARAMETER	MIN	TYP	MAX	UNIT
Power Supply Voltage	-	3.3	-	V

5. Pin Information

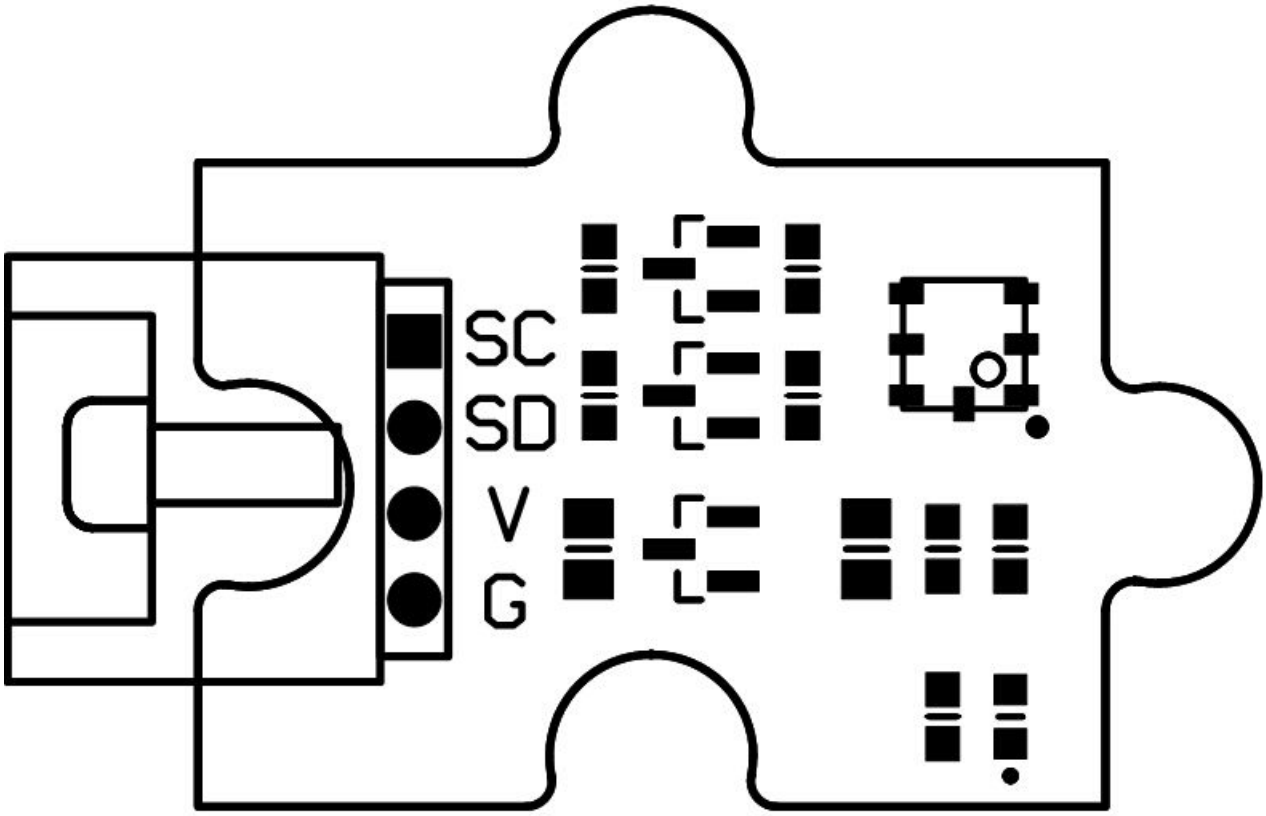

Pic 1 Pin Information

Type	Mark	Description
Barometer Sensor PIN	G	POWER Ground
	V	POWER Supply 5V
	SD	IIC DATA Interface
	SC	IIC Clock Interface

6. Interface Illustration

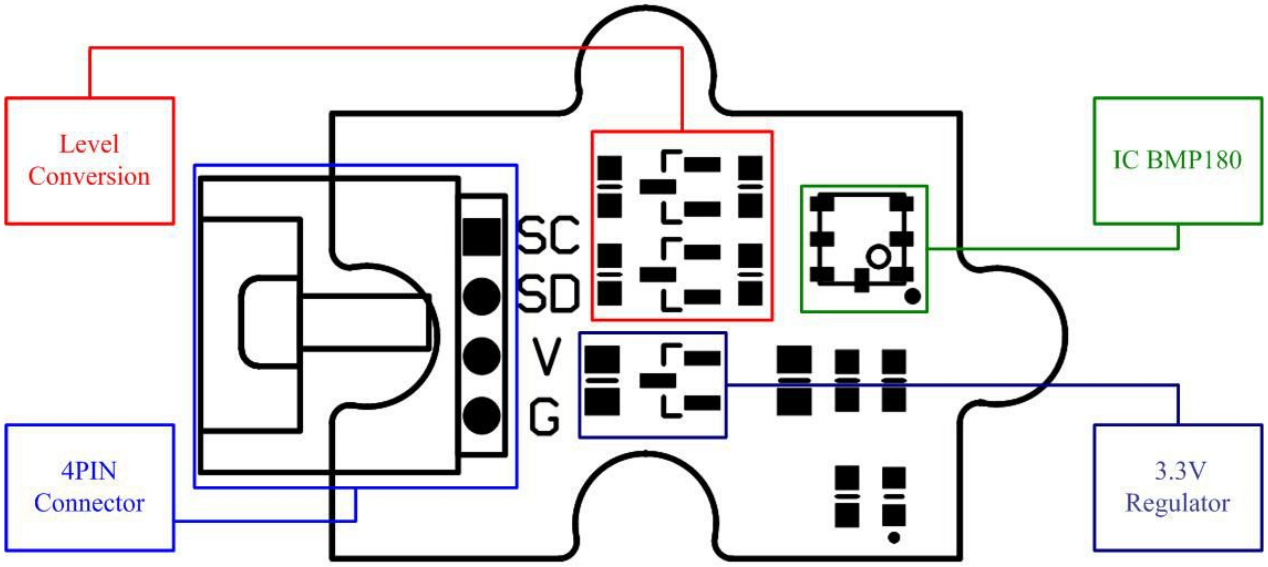

Pic 2 Interface Illustration

7. Parameters

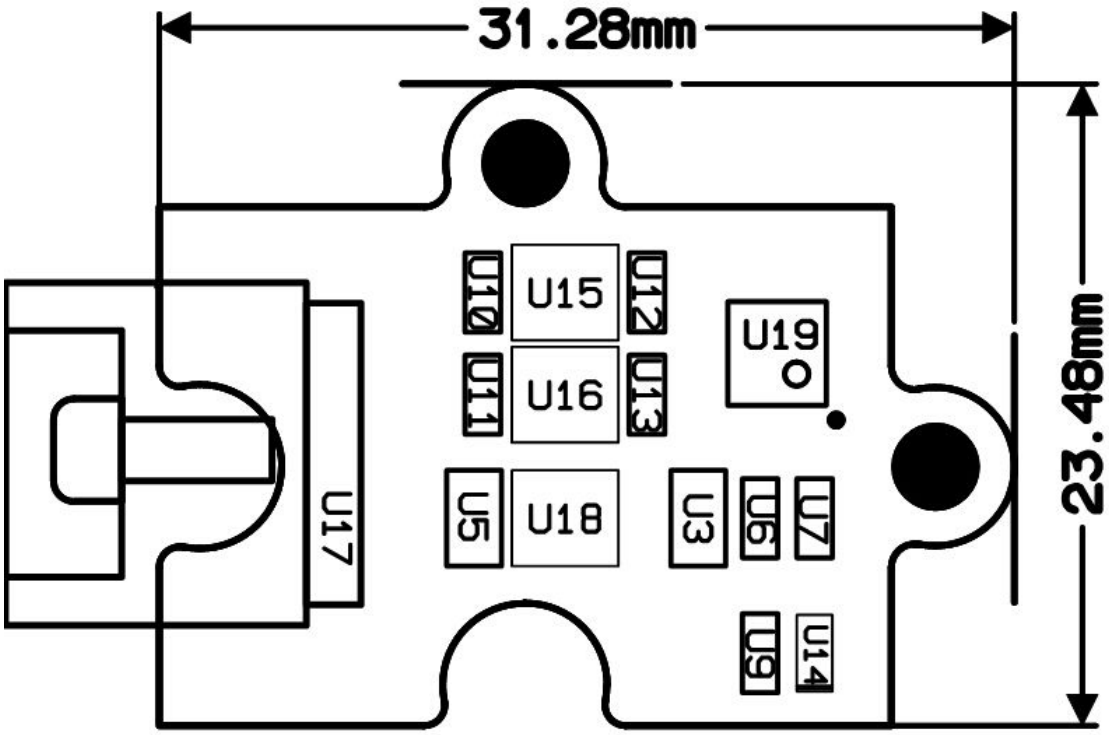

Pic 3 Parameters

8. Revision History

REVISION	DESCRIPTION	RELEASE DATE
V1.0	Initial version	07/07/2014

9. Contact Information

For more information please visit: http://www.elecfreaks.com