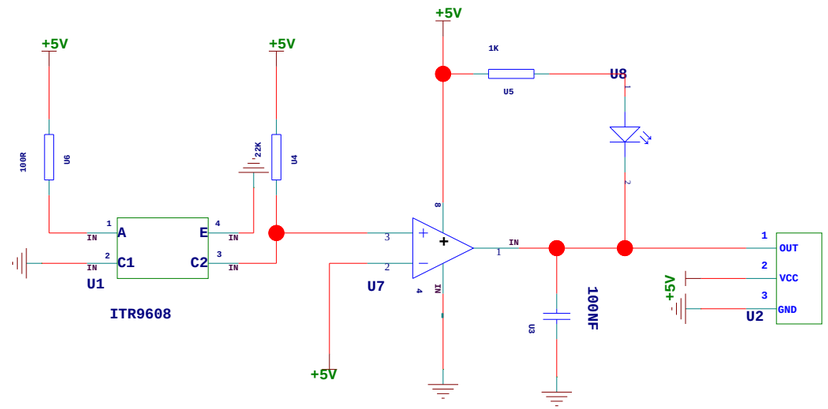

+5V
+5V
+5V
1K
U5
U8
100R
U6
22K
U4
A
E
C1
C2
IN
U1
ITR9608
U7
+5V
U3
100NF
OUT
VCC
GND
U2
+5V