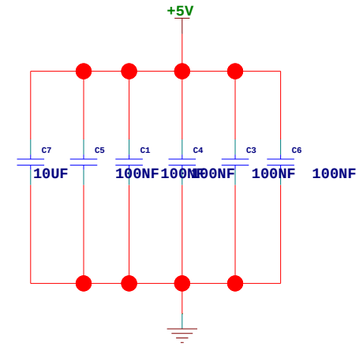
+5V
C7
C5
C1
C4
C3
C6
10UF
100NF
100NF
100NF
100NF
100NF

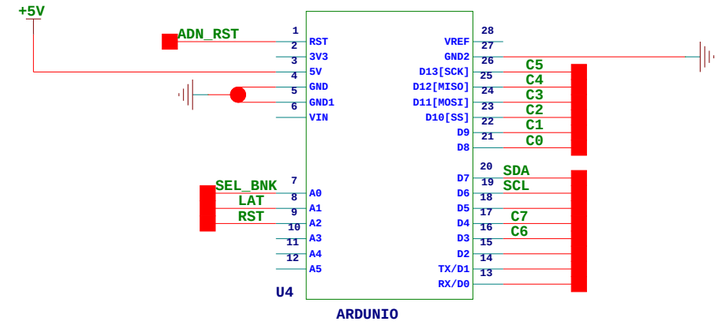
+5V
ADN_RST
RST
3V3
5V
GND
GND1
VIN
SEL_BNK
LAT
RST
A0
A1
A2
A3
A4
A5
VREF
GND2
D13[SCK]
D12[MISO]
D11[MOSI]
D10[SS]
D9
D8
D7
D6
D5
D4
D3
D2
TX/D1
RX/D0
C5
C4
C3
C2
C1
C0
SDA
SCL
C7
C6
U4
ARDUNIO

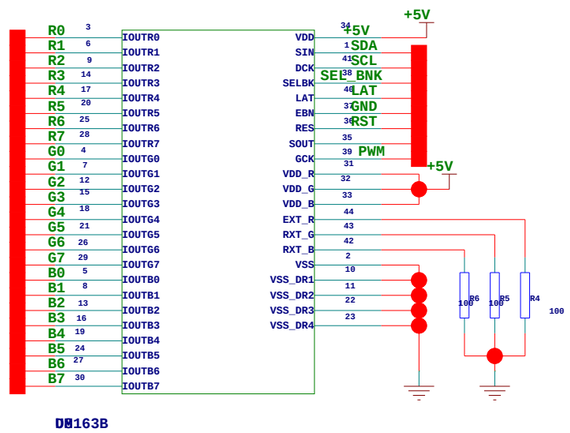
R0
R1
R2
R3
R4
R5
R6
R7
G0
G1
G2
G3
G4
G5
G6
G7
B0
B1
B2
B3
B4
B5
B6
B7
IOUTR0
IOUTR1
IOUTR2
IOUTR3
IOUTR4
IOUTR5
IOUTR6
IOUTR7
IOUTG0
IOUTG1
IOUTG2
IOUTG3
IOUTG4
IOUTG5
IOUTG6
IOUTG7
IOUTB0
IOUTB1
IOUTB2
IOUTB3
IOUTB4
IOUTB5
IOUTB6
IOUTB7
VDD
SIN
DCK
SELBK
LAT
EBN
RES
SOUT
GCK
VDD_R
VDD_G
VDD_B
EXT_R
RXT_G
RXT_B
VSS
VSS_DR1
VSS_DR2
VSS_DR3
VSS_DR4
+5V
SDA
SCL
SEL_BNK
LAT
GND
RST
PWM
+5V
R6
R5
R4
100
100
100
U8
TLC5940

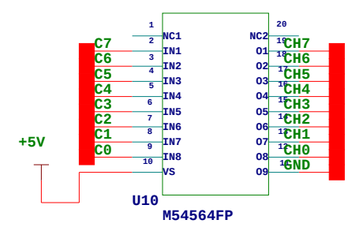
+5V
C7
C6
C5
C4
C3
C2
C1
C0
NC1
IN1
IN2
IN3
IN4
IN5
IN6
IN7
IN8
VS
NC2
O1
O2
O3
O4
O5
O6
O7
O8
O9
CH7
CH6
CH5
CH4
CH3
CH2
CH1
CH0
GND
U10
M54564FP

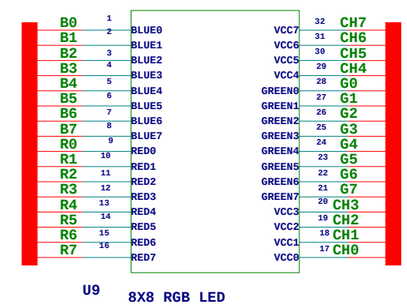
B0
B1
B2
B3
B4
B5
B6
B7
R0
R1
R2
R3
R4
R5
R6
R7
BLUE0
BLUE1
BLUE2
BLUE3
BLUE4
BLUE5
BLUE6
BLUE7
RED0
RED1
RED2
RED3
RED4
RED5
RED6
RED7
VCC7
VCC6
VCC5
VCC4
GREEN0
GREEN1
GREEN2
GREEN3
GREEN4
GREEN5
GREEN6
GREEN7
VCC3
VCC2
VCC1
VCC0
CH7
CH6
CH5
CH4
G0
G1
G2
G3
G4
G5
G6
G7
CH3
CH2
CH1
CH0
U9
8X8 RGB LED

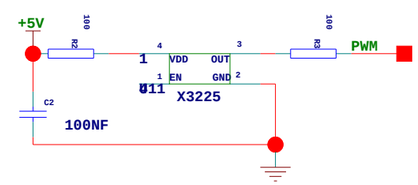
+5V
R2
100
VDD
EN
OUT
GND
R3
100
PWM
U11
X3225
C2
100NF