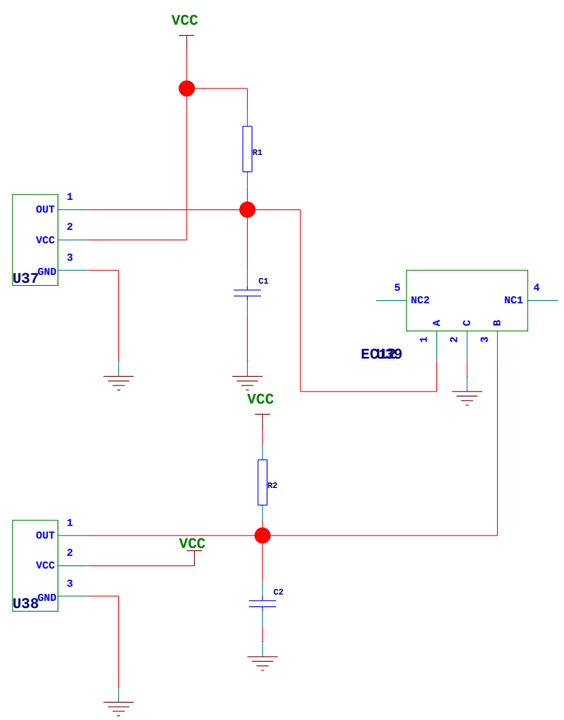
VCC
R1
OUT
VCC
GND
U37
C1
NC2
NC1
A
C
B
EC139
VCC
R2
OUT
VCC
GND
U38
VCC
C2